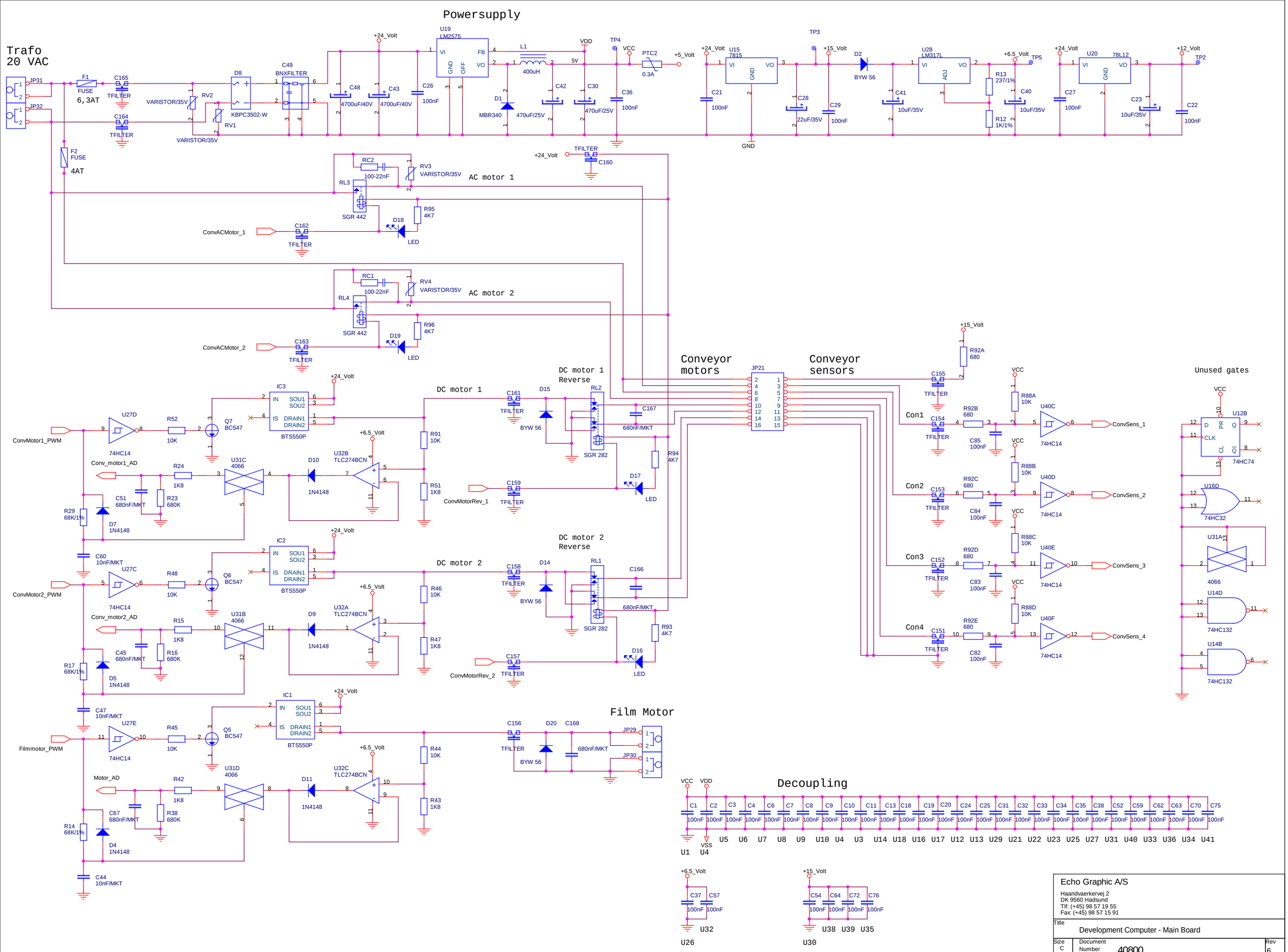



Echo Graphic A/S
Haandvaerkervej 2
DK 9560 Hadsund
Tlf: (+45) 98 57 19 55
Fax: (+45) 98 57 15 91


| | |
|---|---|
| Title | Development Computer - Main Board |
| Size | C |
| Document Number | 40800 |
| Rev | 6 |
| Date: | Tuesday, August 06, 2002 |
| Sheet | 3 of 4 |