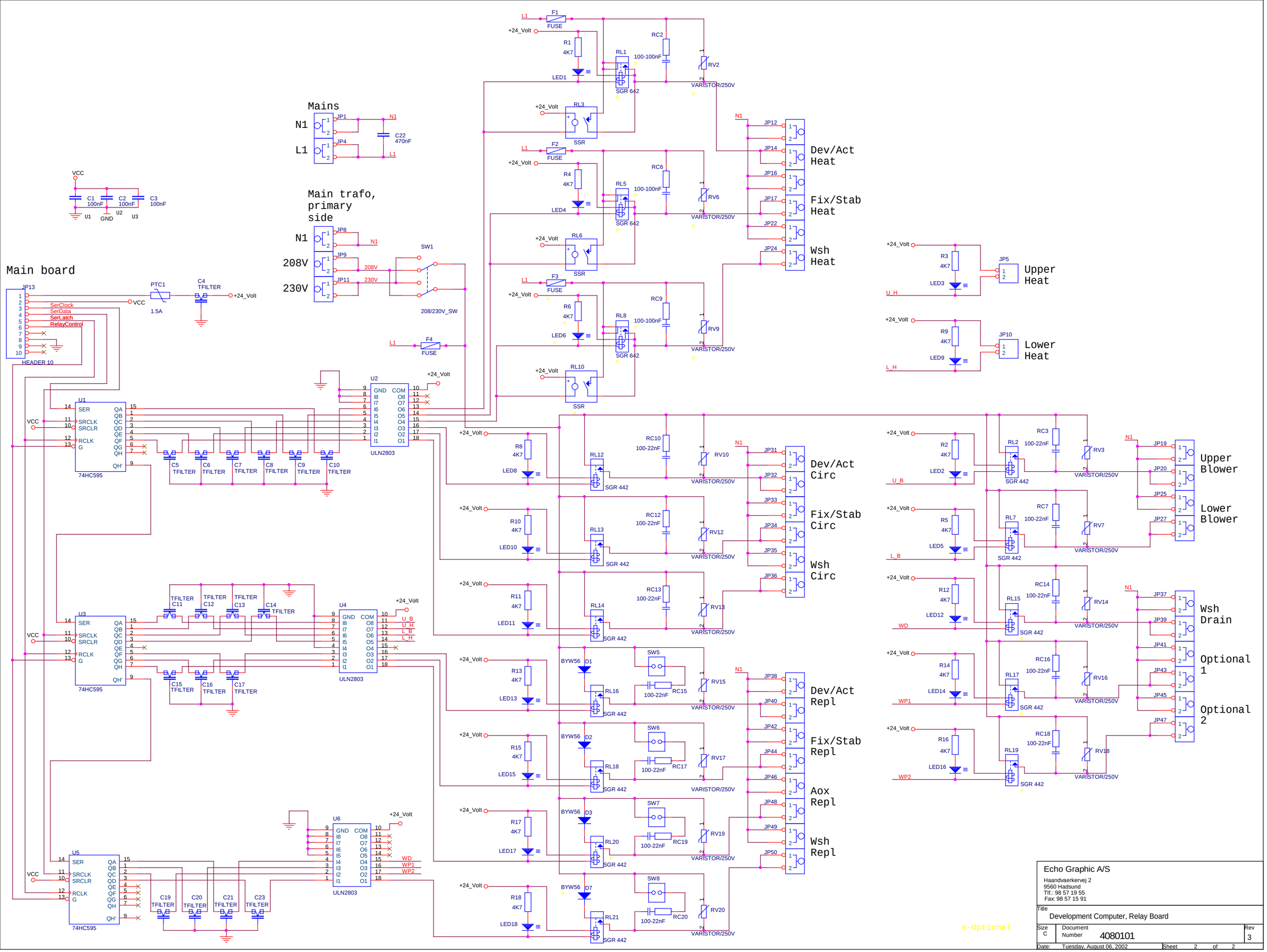
Main board
Mains
N1
L1
Main trafo, primary side
208V
230V
Dev/Act Heat
Fix/Stab Heat
Wsh Heat
Upper Heat
Lower Heat
Dev/Act Circ
Fix/Stab Circ
Wsh Circ
Upper Blower
Lower Blower
Wsh Drain
Optional 1
Optional 2
Dev/Act Repl
Fix/Stab Repl
Aox Repl
Wsh Repl
SerClock
SerData
SerLatch
RelayControl
HEADER 10
74HC595
ULN2803
SGR 642
SGR 442
SSR
VARISTOR/250V
#-Optional
Echo Graphic A/S
Haandvaerkervej 2
9560 Hadsund
Tlf.: 98 57 19 55
Fax: 98 57 15 91
Title
Development Computer, Relay Board
Size C
Document Number 4080101
Rev 3
Date: Tuesday, August 06, 2002
Sheet 2 of 2